STATE OF WASHINGTON
POLICE TRAFFIC COLLISION REPORT

1591971

REPORT NO. E464007

CASE #	15-02356
LOCAL AGENCY CODING	0665
TOTAL # OF UNITS	02
OBJECT STRUCK	

1 INTERSTATE ☐ CITY STREET ☑ FIRE RESULTED ☐
STATE ROUTE ☐ OTHER ☐ STOLEN VEHICLE ☐
COUNTY RD ☐ PRIVATE WAY ☐ HIT & RUN INVOLVED ☑

TRIBAL RESERVATION

DATE OF COLLISION (M M D D Y Y Y Y)	TIME (2400)	COUNTY #	MILES		CITY #
09 - 17 - 2015	1549	31		N ☐ E ☐ S ☐ W ☐	IN ☑ OF ☐ 0664

ON (PRIMARY TRAFFIC WAY): VERNON RD — INTERSECTION ☑ NON-INTERSECTION ☐

BLOCK NO. ☑ MILE POST ☐: 600

DISTANCE: MILES ☐ FEET ☐ N ☐ S ☐ E ☐ W ☐ OF (REFERENCE OR CROSS STREET): N DAVIES RD

UNIT 01 MOTOR VEHICLE ☑ PEDAL-CYCLE ☐ DAMAGE THRESHOLD MET YES ☑ NO ☐ PHONE

LAST NAME	UNKNOWN	FIRST NAME	MIDDLE INITIAL
STREET / NEW ADDRESS ☐			
CITY		ST	ZIP
CDL		RESTRICTIONS	ENDORSEMENTS
DRIVER'S LICENSE #		STATE	SEX U — D.O.B. MMDDYYYY

ON DUTY ☐ STATUS | AIRBAG 9 | RESTR. 9 | EJECT 9 | HELMET USE 9 | INJURY CLASS 0 | NATURE OF INJURIES

LICENSE PLATE # | STATE | VIN#

TRAILER PLATE # | STATE | TRAILER PLATE # | STATE

VEH. YEAR | MAKE | MODEL | STYLE | VEHICLE TOWED YES ☐ NO ☑ | TOWED BY | GOVT. VEHICLE YES ☐ NO ☑

REGISTERED OWNER INFO.

LIABILITY INSURANCE IN EFFECT ☐ INSURANCE CO & POLICY #

VEHICLE LEGALLY STANDING YES ☐ NO ☐ CITATION # | CHARGE

VEHICLE NO. 1 SHADE IN DAMAGED AREA — 9 TOP, 10 BOTTOM

UNIT 02 MOTOR VEHICLE ☑ PEDAL-CYCLE ☐ PEDESTRIAN ☐ PROPERTY OWNER ☐ DAMAGE THRESHOLD MET YES ☑ NO ☐ PHONE D: 3806311004

LAST NAME	THOMPSON	FIRST NAME	GRETCHEN — MIDDLE INITIAL L
STREET / NEW ADDRESS ☐	5814 75TH AVE NE		
CITY	MARYSVILLE	ST WA	ZIP 98270
CDL		RESTRICTIONS	ENDORSEMENTS
DRIVER'S LICENSE #	THOMPGL272PU	STATE WA	SEX F — D.O.B. MMDDYYYY 10 - 31 - 1973

ON DUTY ☐ STATUS | AIRBAG 2 | RESTR. 4 | EJECT 1 | HELMET USE 2 | INJURY CLASS 1 | NATURE OF INJURIES

LICENSE PLATE # 627ZTX | STATE WA | VIN# 5TDDK3EH7A5006971

TRAILER PLATE # | STATE | TRAILER PLATE # | STATE

VEH. YEAR 2010 | MAKE TOYT | MODEL HIGHLAN | STYLE 4W | VEHICLE TOWED YES ☐ NO ☑ | TOWED BY | GOVT. VEHICLE YES ☐ NO ☑

REGISTERED OWNER INFO.

LIABILITY INSURANCE IN EFFECT ☑ INSURANCE CO & POLICY # AMERISE BX0065512

VEHICLE LEGALLY STANDING YES ☑ NO ☐ CITATION # | CHARGE

VEHICLE NO. 2 SHADE IN DAMAGED AREA — 9 TOP, 10 BOTTOM

OFFICER'S NAME (PRINT)	BADGE OR ID #	AGENCY
CHAD CHRISTENSEN	075	WA0311900

PART A 3000-345-159 R (7/06)

STATE OF WASHINGTON
POLICE TRAFFIC
COLLISION REPORT

1591972

CORRECTION

REPORT NO. E464007

CASE # 15-02356

ADDITIONAL PERSONS INVOLVED (PASSENGERS AND/OR WITNESSES ONLY)

NAME (LAST, FIRST, MIDDLE INITIAL)																	
ADDRESS & PHONE #											SEX		D.O.B. MMDDYYYY		-		-
PASSENGER ☐ WITNESS ☐	UNIT #		SEAT POS.		AIRBAG		RESTR.		EJECT		HELMET USE		INJURY CLASS		NATURE OF INJURIES		
NAME (LAST, FIRST, MIDDLE INITIAL)																	
ADDRESS & PHONE #											SEX		D.O.B. MMDDYYYY		-		-
PASSENGER ☐ WITNESS ☐	UNIT #		SEAT POS.		AIRBAG		RESTR.		EJECT		HELMET USE		INJURY CLASS		NATURE OF INJURIES		
NAME (LAST, FIRST, MIDDLE INITIAL)																	
ADDRESS & PHONE #											SEX		D.O.B. MMDDYYYY		-		-
PASSENGER ☐ WITNESS ☐	UNIT #		SEAT POS.		AIRBAG		RESTR.		EJECT		HELMET USE		INJURY CLASS		NATURE OF INJURIES		

NARRATIVE

Unit 2 was stopped at the roundabout on Vernon Rd at North Davies waiting for traffic to clear. Unit 1 was southbound on Vernon Rd. and failed to see Unit 2 was stopped. Unit 1 collided at Unit 2 passenger side rear bumper. Unit 1 pulled across the street and then fled the scene. There were no reported injuries at the time of the collision.

**** AUTO-POPULATED SECTION ****
THE FOLLOWING ARE DESCRIPTIONS ENTERED FOR ITEMS SELECTED AS "OTHER":
Motor Vehicle Unit 1
Traffic Control: ROUNDABOUT
Motor Vehicle Unit 2
Traffic Control: ROUNDABOUT
**** END OF AUTO-POPULATED SECTION ****

I CERTIFY (DECLARE) UNDER PENALTY OF PERJURY UNDER THE LAWS OF THE STATE OF WASHINGTON THAT THE FOREGOING IS TRUE AND CORRECT. (RCW 9A.72.085)

CHAD CHRISTENSEN		09-21-15 08:07 AM	
INVESTIGATING OFFICER'S SIGNATURE	UNIT OR DIST. DET	DATED	PLACE SIGNED

APPROVED BY	DATE
RON BROOKS 013	9/23/2015 8:51:06 AM
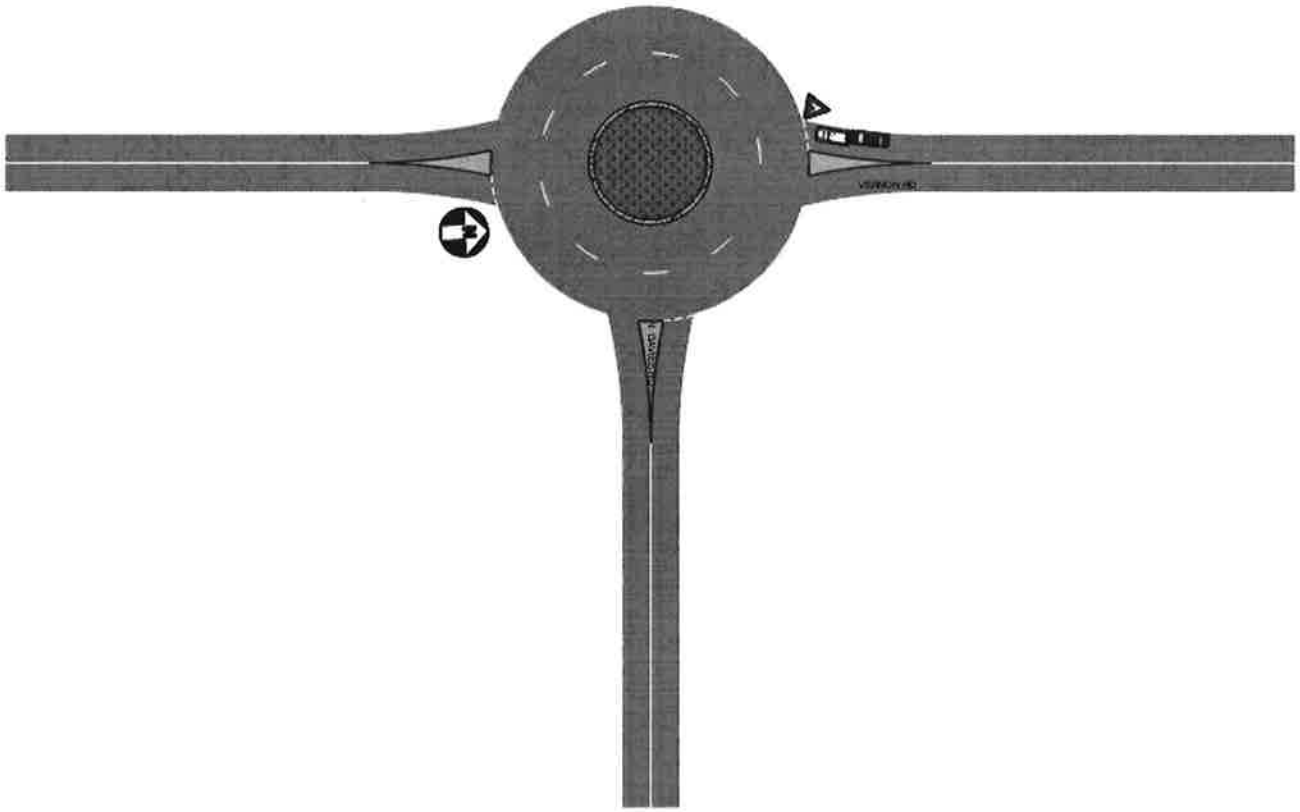
BADGE OR ID #	075	ORI #	WA0311900	TIME POLICE DISPATCHED	3:49 PM	TIME POLICE ARRIVED	3:52 PM